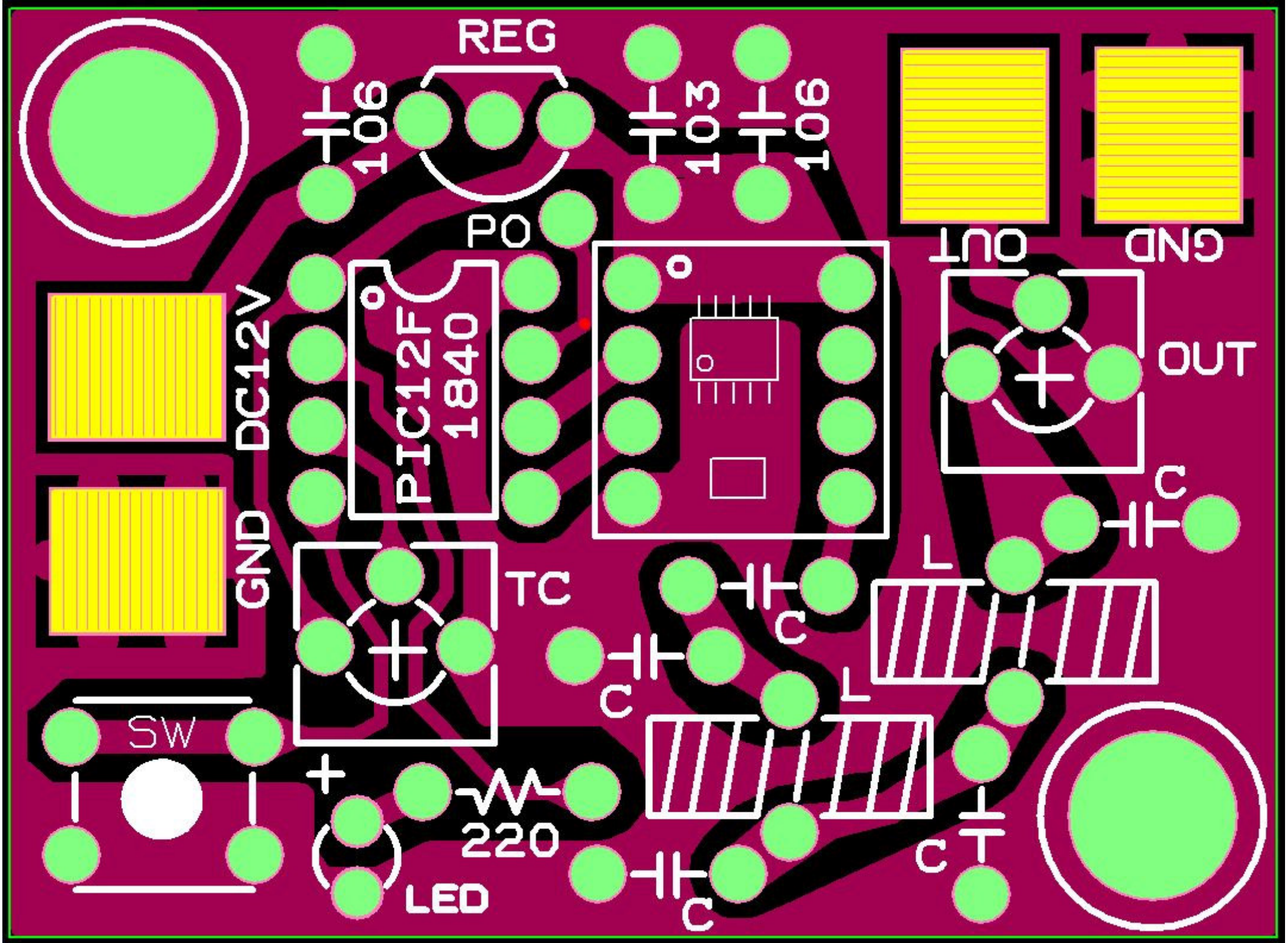
REG
106
103
106
PO
PIC12F
1840
DC12V
GND
OUT
GND
OUT
C
L
TC
C
C
L
SW
220
LED
C
C